User Manual
SKU: ABX00162-ABX00173

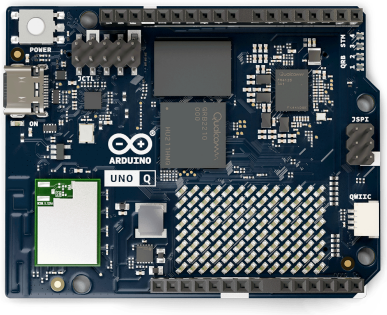

English

Description

Arduino® UNO Q (hereafter UNO Q) is a single-board computer that combines the Qualcomm® Dragonwing™ QRB2210 Microprocessor (MPU), a quad-core Arm® Cortex®-A53 running Debian Linux OS, with the STMicroelectronics STM32U585 Microcontroller (MCU), an Arm® Cortex®-M33 running Arduino Core on Zephyr OS. The Linux system and the microcontroller communicate through Bridge, Arduino's RPC (Remote Procedure Call) library. This allows Arduino sketches on the microcontroller to access Linux services for high-level tasks, while Linux applications can interact with microcontroller peripherals to handle real-time operations within the same project.

UNO Q comes with embedded eMMC storage (options 16 GB, 32 GB) and LPDDR4X SDRAM (options 2 GB, 4 GB) to run Linux and your projects smoothly. It features dual-band Wi-Fi® 5 and Bluetooth® 5.1 for wireless connectivity, a USB-C® connector with power delivery input and video output, and Arduino-compatible headers for easy expansion with shields, carriers, and accessories.

UNO Q integrates seamlessly with Arduino App Lab, enabling developers to combine Arduino sketches, Linux applications, and AI models in one environment. App Lab can run directly on the board or from a connected PC, offering ready-to-use examples, and the flexibility to create custom apps tailored to your projects.

Target Areas

Prototyping, Edge AI & ML, Machine Vision, Education, Smart Devices, Robotics, Home and Building Automation, Gaming

---

Product Intended Use

Arduino Hardware Products are primarily intended for development and prototyping but may also support production solutions. Developers must design and verify security controls early, based on the intended deployment environment. Security is a shared responsibility between Arduino and the solution builder, who must assess the hardware's available security features and add any necessary protections.

Visit docs.arduino.cc/tutorials/security/intended-use-and-security-model/ for the complete Arduino Hardware Products: Intended use and Security model.

CONTENTS

1 Application Examples **5**
2 Features **6**
2.1 UNO Q Variants 6
2.2 General Specifications Overview 6
2.2.1 Processing & Memory 6
2.2.2 Connectivity & Media 7
2.2.3 Expansion & Headers 8
2.3 Related Products 9
3 Ratings **10**
3.1 Input Power 10
3.2 Recommended Operating Conditions 11
3.3 On-Board Voltage Rails 11
4 Functional Overview **12**
4.1 Pinout 12
4.2 Block Diagram 13
4.3 Power Supply 13
5 UI & Indicators **15**
6 MPU & MCU **16**
6.1 Application Processor (MPU) 16
6.2 Real-Time Microcontroller (MCU) 16
7 Inter-Processor Communication **17**
8 Hardware Acceleration **18**
8.1 Graphics Acceleration 18
8.2 Video Acceleration 19
8.2.1 GStreamer Integration 19
8.3 OpenCL Support 20
9 Peripherals **21**
9.1 JMISC (B1) (JMISC1) - Pin Map 22
9.2 JMEDIA (B2) (JMEDIA1) - Pin Map 25
9.3 Qwiic (A4) (QWIIC1) - Pin Map 27
9.4 JSPI (A5) (JSPI1) - Pin Map 27
9.5 JCTL (A1) (JCTL1) - Pin Map 27
9.6 JDIGITAL (A2) (JDIGITAL1) - Pin Map 28

9.7 JANALOG (A3) (JANALOG1) - Pin Map 29
10 High-Speed Peripherals 30
11 Device Operation 31
11.1 Getting Started - Arduino App Lab 31
11.2 Bricks 32
11.3 Hello World 33
11.4 How to Check the App Is Running 33
11.5 Power Button 34
11.6 Online Resources 34
12 Mechanical Information 35
13 RED / UK 38
13.1 Radio Equipment Information (RED Compliance) 40
14 FCC 40
15 ISED 41
16 MIC 42
17 SRRC 42
18 ICASA 42
19 NCC 43
20 ANATEL 43

1 Application Examples

UNO Q combines an AI-capable Linux processor with a real-time microcontroller, delivering the best of high-level computing and deterministic control. Alongside this dual architecture, it supports a broad ecosystem of Arduino shields, carriers, Modulino® nodes, and third-party accessories, making it a flexible platform for diverse applications.

- **Prototyping:** Rapid proof-of-concepts such as vision-based inspection tools, smart kiosks, or compact edge computers with built-in connectivity.
- **Education:** Teaching Linux, real-time programming, AI, and computer vision through project-based learning, from science experiments to interactive educational robots.
- **Robotics:** Autonomous delivery robots, gesture-following companions, and robotic arms with visual feedback, combining Linux vision with MCU-driven motor control.
- **Smart Consumer Devices:** DIY smart cameras, interactive displays, or AR projects powered by dual cameras and GPU acceleration.
- **Home & Building Automation:** Smart doorbells with facial recognition, voice-controlled systems, and personalized climate hubs.
- **Gaming:** Retro console emulation, custom arcade cabinets, or enhanced gameplay with gesture-based controls, face tracking, and real-time feedback.

2 Features

2.1 UNO Q Variants

UNO Q is available in two variants:

- **ABX00162**: 2 GB RAM, 16 GB on-board storage
- **ABX00173**: 4 GB RAM, 32 GB on-board storage

2.2 General Specifications Overview

2.2.1 Processing & Memory

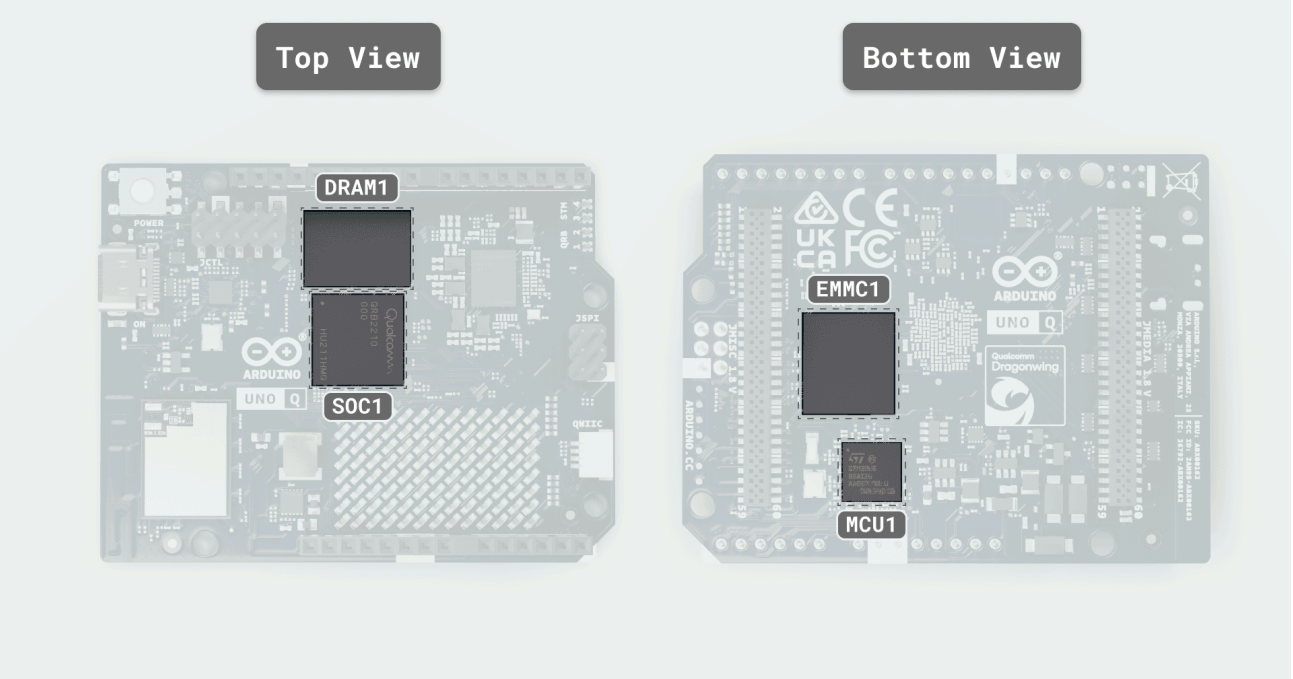

Subsystem	Details
Main MPU	- Qualcomm Dragonwing™ QRB2210 - System-on-Chip (SoC) (MPU) (SOC1): 4 × Arm Cortex-A53 @ 2.0 GHz, 64-bit - Adreno 702 GPU @ 845 MHz (3D graphics) - Dual ISPs: 13 MP + 13 MP or 25 MP @ 30 fps - Debian OS (upstream support) - I/O: USB 3.1 with Role-Switching Capabilities over USB Connector, SDIO 3.0, 4-lane MIPI-CSI-2 & 4-lane MIPI-DSI
Real-time MCU	- ST STM32U585 (MCU) (MCU1), Arm Cortex-M33 up to 160 MHz - Arduino Core on Zephyr OS

Subsystem	Details
	- 2 MB Flash, 786 kB SRAM
System Memory	- eMMC 16 or 32 GB options (EMMC1) for OS/data - LPDDR4X 2GB or 4 GB options (single-rank, 32-bit) (DRAM1)

The Qualcomm Dragonwing™ QRB2210 I/O operates at 1.8 V. The MPU drives the MIPI-CSI-2 camera and MIPI-DSI display interfaces on JMEDIA, and the 1.8 V MPU (SoC) GPIO and audio endpoints exposed on JMISC. JMISC is a mixed-voltage header that also carries 3.3 V MCU signals and analog audio alongside the 1.8 V MPU lines. DisplayPort video is provided by the on-board ANX7625, which converts the MPU's MIPI-DSI to DisplayPort Alt-Mode on USB-C. The same MIPI-DSI signal is also exposed on the JMEDIA header. The two are multiplexed, not independent, so only one display output, either USB-C DisplayPort Alt-Mode or JMEDIA MIPI-DSI, can be active at a time. The STM32U585 manages ADC, PWM, CAN, the LED matrix, and the 3.3 V headers (JDIGITAL, JANALOG, JSPI, and Qwiic).

2.2.2 Connectivity & Media

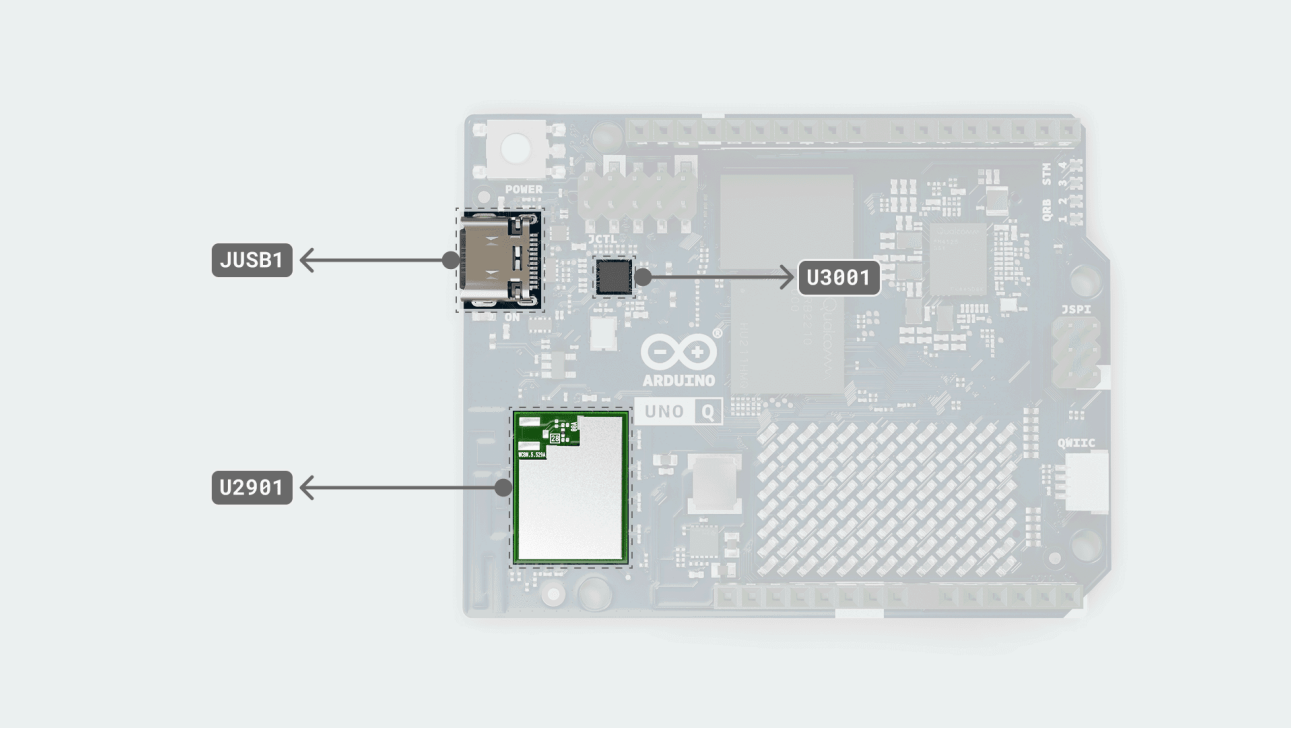

Subsystem	Details
Wireless Module	- WCBN3536A (Qualcomm WCN3980) (U2901) - Wi-Fi® 5 802.11a/b/g/n/ac (dual-band) + Bluetooth® 5.1
USB-C Port (JUSB1)	- USB 3.1 with Role-Switching Capabilities - DisplayPort Alt-Mode via the ANX7625 DSI-to-DP bridge (U3001) (SuperSpeed differential pairs on the Type-C are routed for DP Alt Mode) - Video output (SBC mode): Supports Full HD (1920 × 1080p) displays, optimal resolution is

Subsystem	Details
	1280 × 720p - This MIPI-DSI signal is shared with the JMEDIA header, only one display output (USB-C or JMEDIA) is active at a time - USB Power Delivery negotiation requests a **5 V / 3 A** contract only (no higher-voltage profiles) - VBUS load-switch/back-drive protection (Q2801)

The wireless module uses SDIO for Wi-Fi® data and a UART for Bluetooth® control, with a shared PCB antenna.

2.2.3 Expansion & Headers

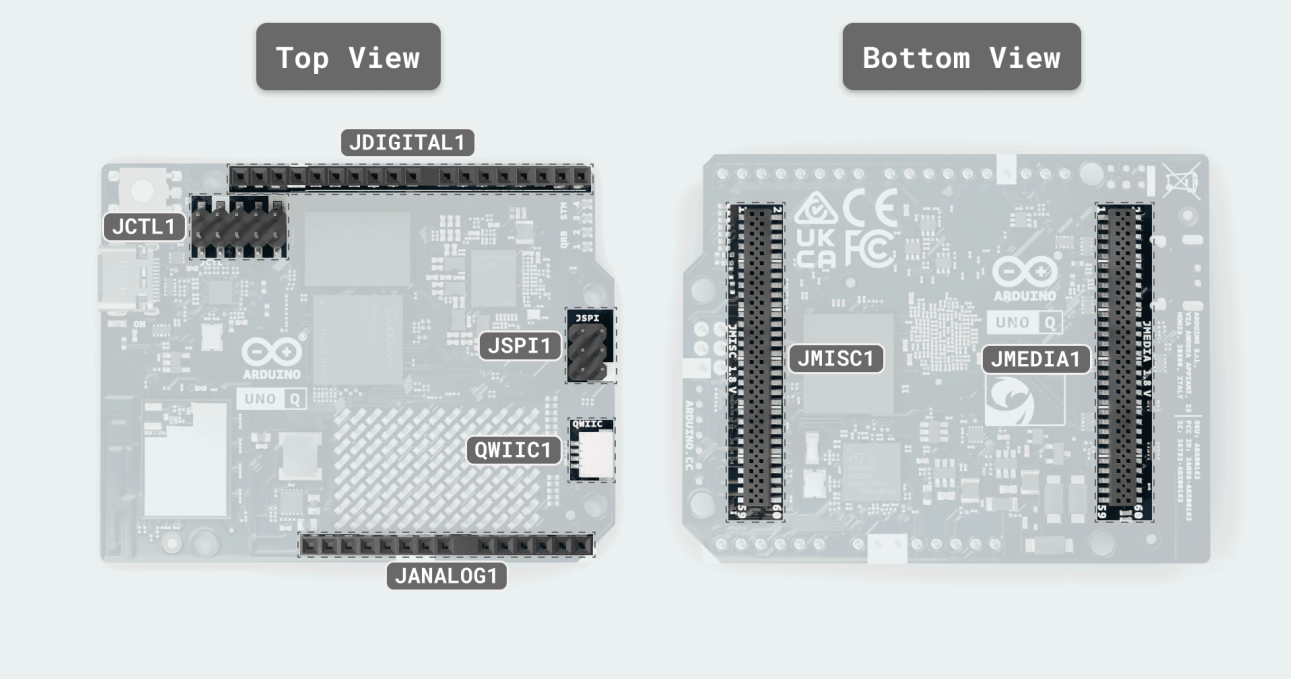

Interface (Connector)	Voltage & Pin Count	Details
JMEDIA (JMEDIA1)	1.8 V signals, 60-pin	- High-speed camera/display lanes (MIPI DSI, CSI) - Camera control bus (CCI I²C) - dedicated, not general-purpose GPIO - Camera clocks (SOC_CAM_MCLK0/1) - Also carries power rails (+3V3 OUT, VIN IN) and GND
JMISC (JMISC1)	Mixed 1.8 V / 3.3 V, 60-pin	- Mixed GPIO and SDIO - MCU peripherals: SDMMC1, TRACE, PSSI (parallel camera), I²C4, MCO/CRS_SYNC, OPAMP1 pins - Audio endpoints: Mic2 INP/INM/BIAS, Headphone L/R + REF, LineOut P/M, Earpiece P/R, HS_DET

Interface (Connector)	Voltage & Pin Count	Details
		- MPU (SoC) GPIO banks (SE0) at 1.8 V - Also carries power rails (+5V SYS OUT, +3V3 OUT, +1V8 OUT, VBAT OUT, VCOIN IN) and GND
JCTL (JCTL1)	1.8 V, 10-pin	- SE4 UART console - Forced USB boot input - PMIC reset input - VBUS power-switch disable - 1.8 V rail and GND
JDIGITAL (JDIGITAL1)	3.3 V, 18-pin	- Digital I/O for SPI, I²C, UART, PWM, CAN
JANALOG (JANALOG1)	3.3 V, 14-pin	- Analog I/O - ADC channels and references
JSPI (JSPI1)	3.3 V logic, 6-pin + 5 V SYS	- Dedicated SPI: MOSI, MISO, SCLK - MCU reset (NRST) - Ground - 5 V SYS (diode-OR output)
Qwiic (QWIIC1)	3.3 V, 4-pin	- I²C (Qwiic ecosystem)

2.3 Related Products

- Arduino UNO shields via JDIGITAL and JANALOG
- UNO Q compatible carrier boards
- Full 24-pin USB-C cable
- USB-C dongle with external power delivery capabilities

3 Ratings

3.1 Input Power

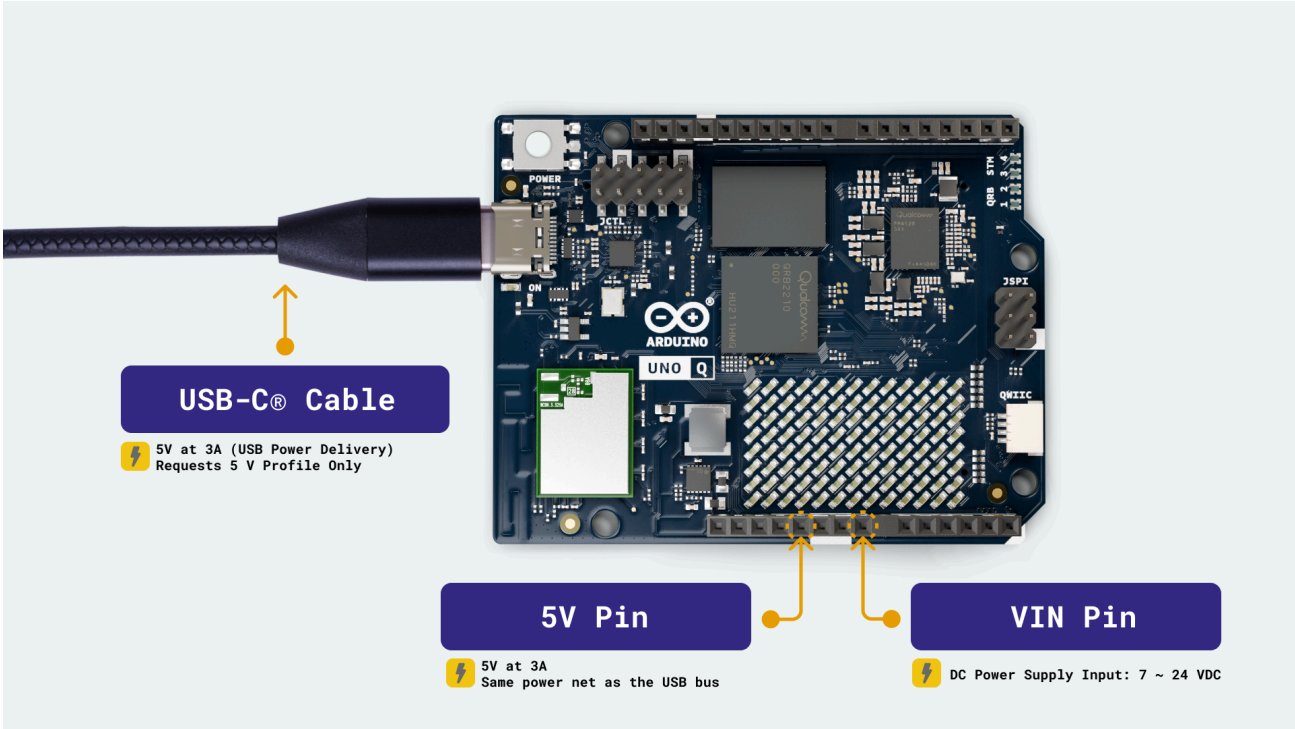

UNO Q Input Methods

Source	Voltage Range	Maximum Current	Connector
USB-C VBUS	5 V	up to 3 A	USB-C connector
VIN (DC IN)	7-24 V	-	JMEDIA, JANALOG (VIN)
5 V Pin (5V_SYS)	5 V	up to 3 A	JANALOG, JMISC, JSPI

UNO Q supports three power inputs: a USB-C port, a 7-24V DC input, and the 5V_SYS pin available on JANALOG, JMISC or JSPI. Over USB Power Delivery, it requests only the 5 V / 3 A contract and does not request higher-voltage PD profiles. Use a supply and cable rated for 5 V at 3 A to avoid undervoltage during short activity peaks such as wireless bursts or display initialization. A regulated external 5 V DC source can also be used to supply power to the board via the 5V_SYS pin on JANALOG, JMISC or JSPI.

USB-C VBUS and the 5 V output of the 7-24 V buck are *diode-OR* combined onto the system 5 V bus (5V_SYS). From 5V_SYS, the design derives the 3.8 V pre-regulator node and, subsequently, the 3.3 V. The PMIC, powered by 5V_SYS, derives the 1.8V rail.

Reverse-polarity protection: Verified with -24 V applied to DC IN. The operation is specified only with the correct polarity. Do not apply reverse voltage during normal use.

Schottky OR path: Forward-voltage drop from the buck output to 5V_SYS was measured as follows (JANALOG VIN injection, Rigol DP832 supply in series, Keithley DMM6500 measurement, 8542B active load). Power dissipation is

calculated as `P = I × Vf`.

Load current	Forward drop (Vf)	Diode dissipation
1.0 A	0.35 V	0.35 W
1.5 A	0.37 V	0.56 W
2.0 A	0.39 V	0.78 W

3.2 Recommended Operating Conditions

Use the limits below to size power sources, define rail tolerances, and plan thermal margin:

Parameter	Symbol	Minimum	Typical	Maximum	Unit
USB-C input	VBUS_USBC	4.5	5.0	5.5	V
DC input	DC_IN	7.0	-	24.0	V
3.3 V system rail	PWR_3P3V	3.1	3.3	3.5	V
Operating temperature	T_OP	-10	-	60	°C

Minimum indicates the lowest continuous value for regular operation; brief dips can cause resets or link drops. *Typical* is the nominal design point. *Maximum* must not be exceeded. For DC_IN (7-24 V), select a supply that comfortably covers the 5 V load and use short cables to reduce voltage drop. The PWR_3P3V range reflects regulator tolerance and load. The temperature range refers to ambient air near the board, and operating near the limits can reduce available output current.

3.3 On-Board Voltage Rails

Voltage	Rail	Origin / Regulator
5.0 V	5V_SYS	Diode OR of USB-C VBUS and 7-24 V buck output (both via Schottky rectifiers)
3.8 V	PWR_3P8V	Step-down (buck) from 5V_SYS
3.3 V	PWR_3P3V	Step-down (buck) from PWR_3P8V
1.8 V	VREG_L15A_1P8V	PM4125 LDO L15A from 5V_SYS

4 Functional Overview

4.1 Pinout

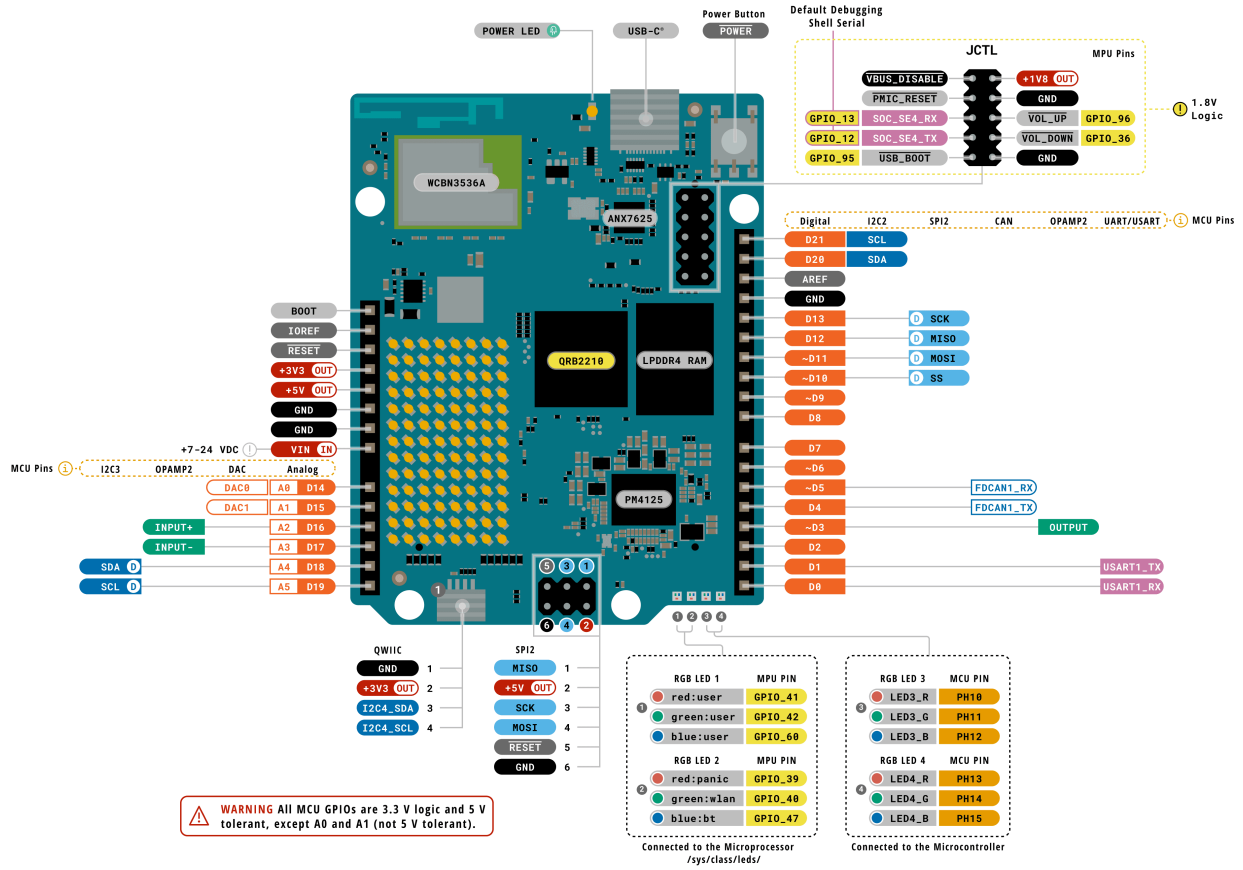

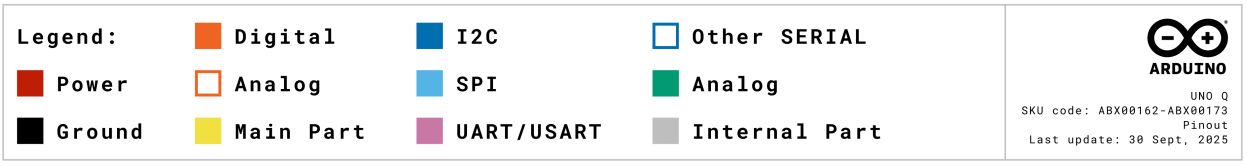

4.2 Block Diagram

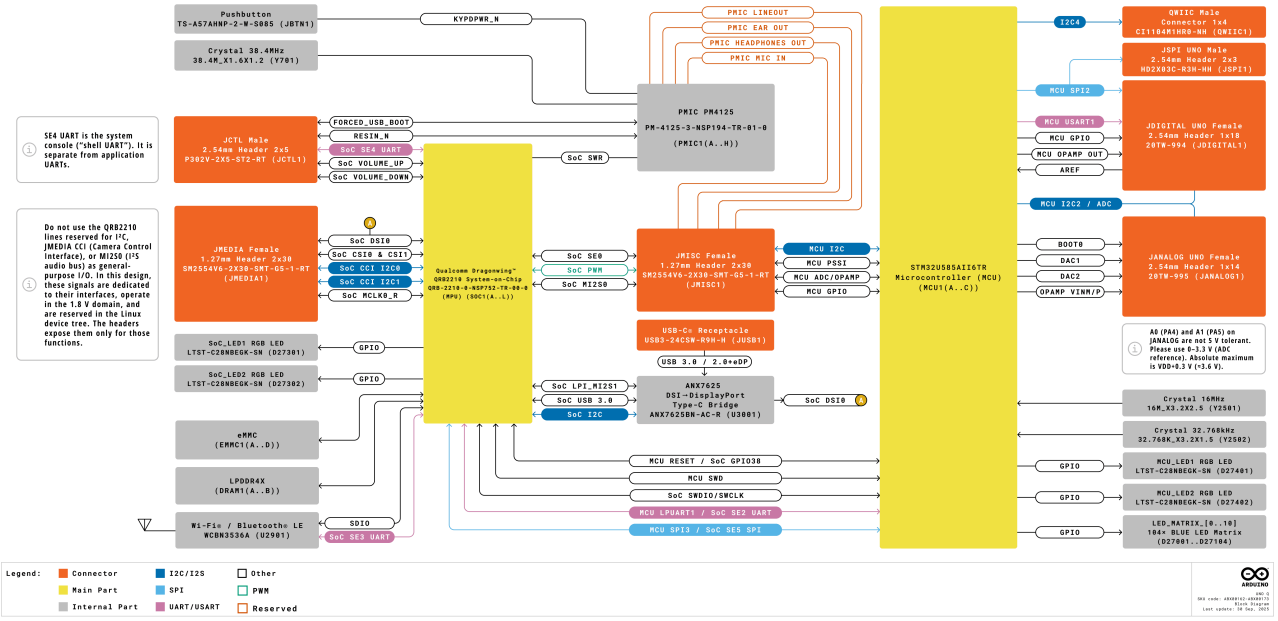

4.3 Power Supply

UNO Q supports dual power inputs: a USB-C port and a 7-24V DC input. *USB-C VBUS* and the 5 V output of the 7-24 V buck are *diode-OR* combined onto the system 5 V bus (5V_SYS).

5V_SYS supplies the **PM4125 PMIC (PMIC1)** at USB_IN. The PMIC's L15A LDO provides the 1.8 V rail (VREG_L15A_1P8V) and powers the SoC I/O banks, ANX7625 DVDD18, Wi-Fi® digital logic, and the on-board level shifters. The 1.8 V rail is also available on JMISC. From 5V_SYS, a buck generates the PWR_3P8V (3.8 V) reserved for system design and future features. A second buck generates PWR_3P3V for the STM32U585, the ANX7625 (3.3 V rails), the Wi-Fi® 3.3 V domain, and the 3.3 V header pins.

A *protected P-channel MOSFET* (Q2801) can source USB VBUS from 5V_SYS when the board operates as a USB host/OTG. The VCOIN powers only the real-time clock of the PMIC and does not power the Linux or MCU domains. The VBAT connects to the PWR_3P8V and is reserved for system design and future features.

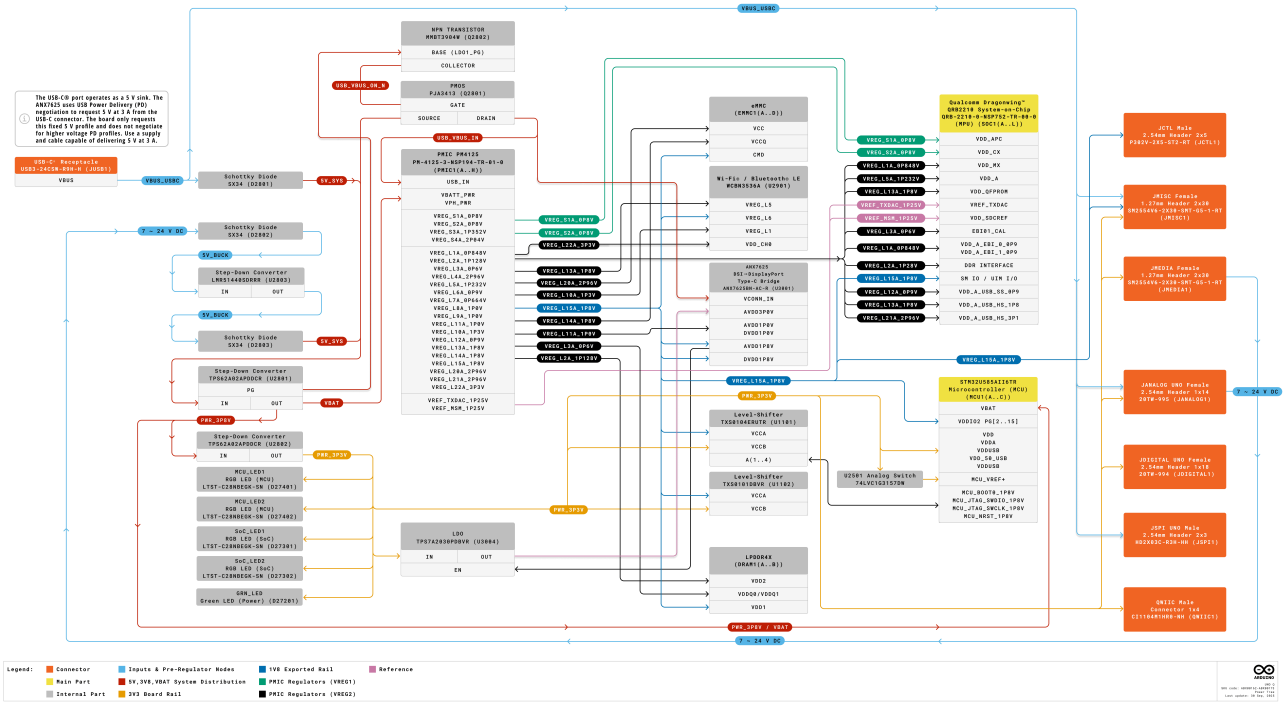

Arduino UNO Q Power Tree

5 UI & Indicators

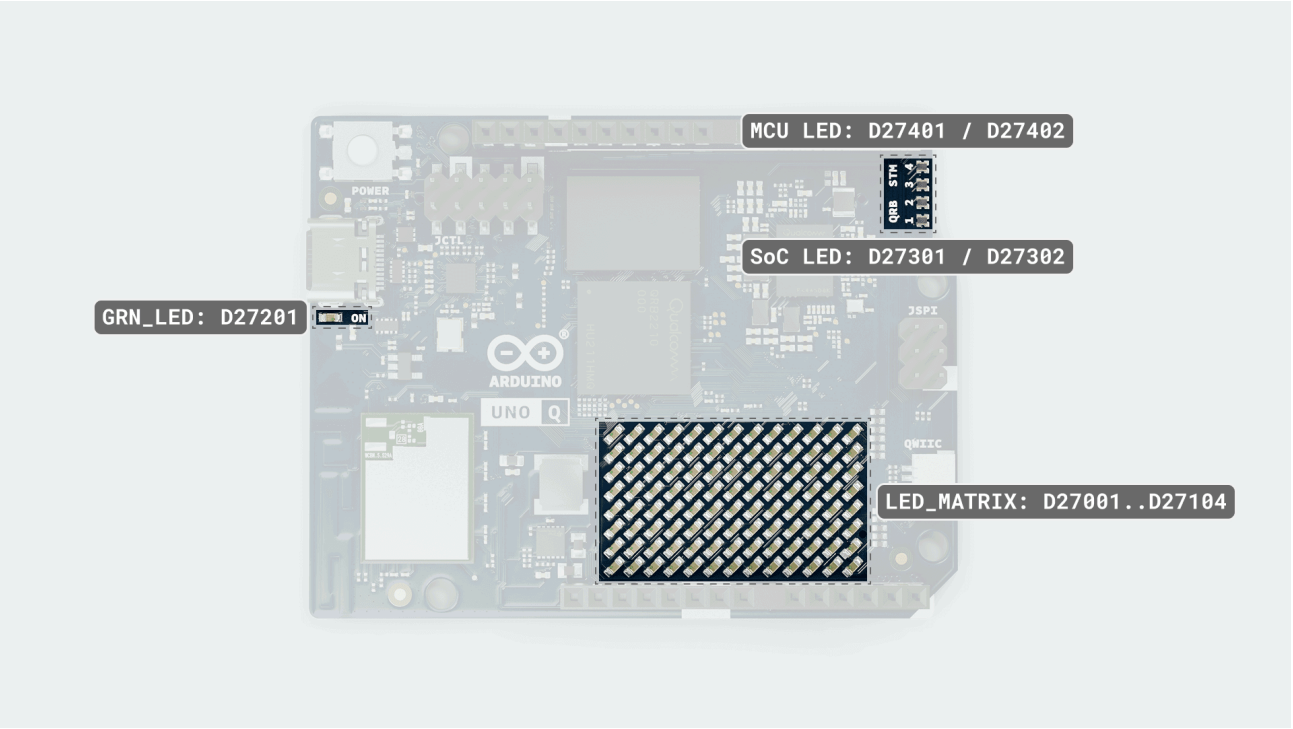

- **RGB LEDs (Linux-controlled):** Two tri-color LEDs are driven by the Qualcomm Dragonwing™ QRB2210 application processor and exposed via `/sys/class/leds/`.
  - **RGB LED 1 (D27301):** channels: `red:user` → **GPIO_41**, `green:user` → **GPIO_42**, `blue:user` → **GPIO_60**.
  - **RGB LED 2 (D27302):** channels: `red:panic` → **GPIO_39**, `green:wlan` → **GPIO_40**, `blue:bt` → **GPIO_47**.

    By default, RGB LED 2 indicates system status, `PANIC`, `WLAN`, and `BT`, but it can also be user-controlled. PWM frequency is approximately 2 kHz for smooth color transitions.
- **RGB LEDs (MCU-controlled):** Two tri-color LEDs are driven by the STM32U585.
  - **RGB LED 3 (D27401):** LED3_R → **PH10**, LED3_G → **PH11**, LED3_B → **PH12**.
  - **RGB LED 4 (D27402):** LED4_R → **PH13**, LED4_G → **PH14**, LED4_B → **PH15**.

> The RGB LEDs are active-low, meaning they turn on when driven to logic `0`.

- **LED matrix (D27001..D27104):** 8 × 13 monochrome blue LED matrix (104 pixels) driven by the STM32U585. It displays the boot logo for approximately 20–30 seconds during Linux startup. Accessing the matrix before startup completes may interfere with MCU operation.
- **Power LED (D27201):** Green indicator tied to the 3.3 V rail and illuminated whenever the board is powered.

6 MPU & MCU

An MPU (Microprocessor unit) is a high-performance application processor designed to run a full operating system and complex software. An MCU (Microcontroller unit) is a small, power-efficient controller focused on fast, precise timing for I/O and control. UNO Q combines both to pair OS-level compute with responsive, time-critical control on a single-board board and communicate through Bridge, an RPC layer implemented on both sides.

6.1 Application Processor (MPU)

Qualcomm® Dragonwing™ QRB2210 is a quad-core Arm® Cortex®-A53 running Debian Linux OS. Its I/O operates at 1.8 V and it handles the high-speed media and Type-C/PD policy.

- Voltage domain: 1.8 V for MPU (SoC) GPIO and high-speed interfaces
- Drives JMEDIA: MIPI-CSI-2 camera and MIPI-DSI display lanes
- Drives 1.8 V MPU GPIO and audio endpoints on JMISC (mixed-voltage header)
- USB-C: role switching and PD negotiation (requests 5 V / 3 A)
- DisplayPort output via on-board ANX7625 (converts MIPI-DSI to DP Alt-Mode)

6.2 Real-Time Microcontroller (MCU)

STMicroelectronics® STM32U585 is an Arm® Cortex®-M33 running Arduino Core on Zephyr OS. It provides fast, precise timing for control tasks and 3.3 V I/O headers.

- Voltage domain: 3.3 V for GPIO and analog (VREF+ ≈ 3.3 V)
- Manages ADC, PWM, CAN, LED matrix, timers
- Handles 3.3 V headers: JDIGITAL, JANALOG, JSPI, Qwiic

JMISC handles both domains: 1.8 V MPU lines sit alongside 3.3 V MCU signals (e.g., PSSI, SDMMC1, TRACE, I²C4) and analog/audio. Please check the voltage levels when attaching carriers or external logic.

7 Inter-Processor Communication

The Qualcomm® Dragonwing™ QRB2210 (MPU) and the STM32U585 (MCU) communicate through the Arduino Bridge, a software-based Remote Procedure Call (RPC) layer implemented on both the Linux and MCU sides. Bridge provides a service-oriented API that allows either processor to expose services for the other to call, while also supporting one-way notifications for asynchronous events. It manages message routing between processors and accommodates multiple physical transports. Through its API, Bridge enables type-safe function calls, allowing microcontroller sketches to invoke Linux services and receive structured responses, or to push data via notifications.

If a hardware indicator is required for a carrier board or external logic, firmware can dedicate a 1.8V MPU GPIO on JMISC, or an available JCTL GPIO, as a ready or wake output. This signal can be received on an MCU GPIO through level-compatible circuitry, such as a level shifter or open-drain configuration with a pull-up resistor. The firmware defines the exact role of this signal. Alternatively, activity on the selected transport (USB CDC, UART, or SPI) can serve as a wake source when the MCU is in sleep mode.

> MPU GPIO signals operate in the application processor's low-voltage domain (1.8 V). Ensure any connection to the microcontroller is level-compatible with its I/O voltage rail (3.3 V). For example, use a level shifter or an open-drain configuration with a pull-up to the microcontroller's I/O rail.

8 Hardware Acceleration

The UNO Q provides hardware acceleration for both 3D graphics and video encoding/decoding through the integrated Adreno 702 GPU running at 845 MHz.

8.1 Graphics Acceleration

The Adreno 702 GPU provides hardware-accelerated 3D graphics rendering through open-source Mesa drivers. Applications can access GPU acceleration via standard graphics APIs, including OpenGL, OpenGL ES, Vulkan, and OpenCL.

Graphics API	Driver	Hardware Support	Current Driver Version	Device Name
Desktop OpenGL	freedreno	-	3.1	FD702
OpenGL ES	freedreno	3.1	3.1	FD702
Vulkan	turnip	1.1	1.0.318	Turnip Adreno (TM) 702
OpenCL	Mesa	2.0	2.0	-

The Adreno 702 GPU features unified memory architecture, sharing system RAM with the CPU for data transfer. It supports 64-bit memory addressing and provides direct rendering capabilities for optimal graphics performance.

Parameter	Specification
Clock Frequency	845 MHz
Memory Architecture	Unified (shared with system RAM)
Available Video Memory	1740 MB
Memory Addressing	64-bit
Direct Rendering	Yes
Maximum 2D Texture Size	16384 × 16384 pixels
Maximum 3D Texture Size	2048^3 voxels
Maximum Cube Map Size	16384 × 16384 pixels
OpenGL Shading Language (GLSL)	1.40
OpenGL ES Shading Language	3.10 ES

The Mesa graphics stack provides support for standard OpenGL extensions and features. Applications using OpenGL, OpenGL ES, or Vulkan will automatically use hardware acceleration without additional configuration. Standard graphics utilities such as `mesa-utils` and `vulkan-tools` work out of the box on the UNO Q.

> **Note:** The OpenGL and Vulkan drivers are available through the **freedreno (OpenGL/OpenGL ES)** and **turnip (Vulkan)** open-source Mesa drivers, providing transparency and community support. While the Adreno 702 hardware supports Vulkan 1.1, the current driver implementation provides Vulkan 1.0.318. **There are no UNO Q-specific OpenGL or Vulkan examples. However, standard Mesa utilities and examples from the Mesa project can be used as references.**

8.2 Video Acceleration

The Adreno 702 GPU includes dedicated hardware video encoders and decoders accessible through the `V4L2 (Video4Linux2)` API via `/dev/video0` and `/dev/video1` devices. Hardware acceleration is available for the following video codecs:

Codec	Encoding	Decoding	GStreamer Element
H.264 (AVC)	Yes	Yes	v4l2h264enc / v4l2h264dec
H.265 (HEVC)	Yes	Yes	v4l2h265enc / v4l2h265dec
VP9	No	Yes	v4l2vp9dec

The hardware video encoder and decoder offload compression and decompression tasks from the CPU to dedicated hardware, enabling efficient real-time video processing. This reduces system power consumption and allows the CPU to focus on application logic. Hardware acceleration is available for resolutions up to 1920×1080 (Full HD), including common formats such as 720p (1280×720).

8.2.1 GStreamer Integration

The recommended approach for accessing hardware video acceleration is through **GStreamer**, which provides a high-level pipeline interface to the V4L2 devices. The following GStreamer elements provide hardware-accelerated video processing:

For H.264 decoding, the following pipeline can be used:

```
gst-launch-1.0 filesrc location=videos/xxxxx.mp4 \
  ! qtdemux name=demux demux.video_0 ! queue ! h264parse ! v4l2h264dec \
  ! videoconvert ! autovideosink
```

For H.265 decoding, the following pipeline can be used:

```
gst-launch-1.0 filesrc location=videos/xxxxx.mp4 \
  ! qtdemux name=demux demux.video_0 ! queue ! h265parse ! v4l2h265dec \
  ! videoconvert ! autovideosink
```

For VP9 decoding, the following pipeline can be used:

```
gst-launch-1.0 filesrc location=videos/xxxxx.webm \
  ! matroskademux ! queue ! v4l2vp9dec \
  ! videoconvert ! autovideosink
```

For H.264 encoding, the following pipeline can be used:

```
gst-launch-1.0 videotestsrc num-buffers=30 \
  ! video/x-raw,width=1280,height=720,framerate=30/1 \
  ! v4l2h264enc ! h264parse ! mp4mux ! filesink location=/tmp/output.mp4
```

For H.265 encoding, the following pipeline can be used:

```
gst-launch-1.0 videotestsrc num-buffers=30 \
  ! video/x-raw,width=1920,height=1080,framerate=30/1 \
  ! v4l2h265enc ! h265parse ! mp4mux ! filesink location=/tmp/output.mp4
```

For concurrent encoding and decoding, the following pipeline can be used:

```
gst-launch-1.0 -v videotestsrc num-buffers=1000 \
  ! video/x-raw,format=NV12,width=1280,height=720,framerate=30/1 \
  ! v4l2h264enc capture-io-mode=4 output-io-mode=2 ! h264parse \
  ! v4l2h264dec capture-io-mode=4 output-io-mode=2 ! videoconvert \
  ! autovideosink
```

Developer Access: The V4L2 video devices are accessible through standard Linux APIs, allowing direct integration into C/C++ applications using libv4l2 or through higher-level frameworks like GStreamer, FFmpeg, or OpenCV with V4L2 backend support.

8.3 OpenCL Support

OpenCL 2.0 support is available through the Mesa implementation, allowing general-purpose GPU (GPGPU) computing for parallel processing tasks, scientific computing, and compute-intensive operations. The Adreno 702's OpenCL capabilities allow offloading compute-intensive workloads from the CPU to the GPU for improved performance.

9 Peripherals

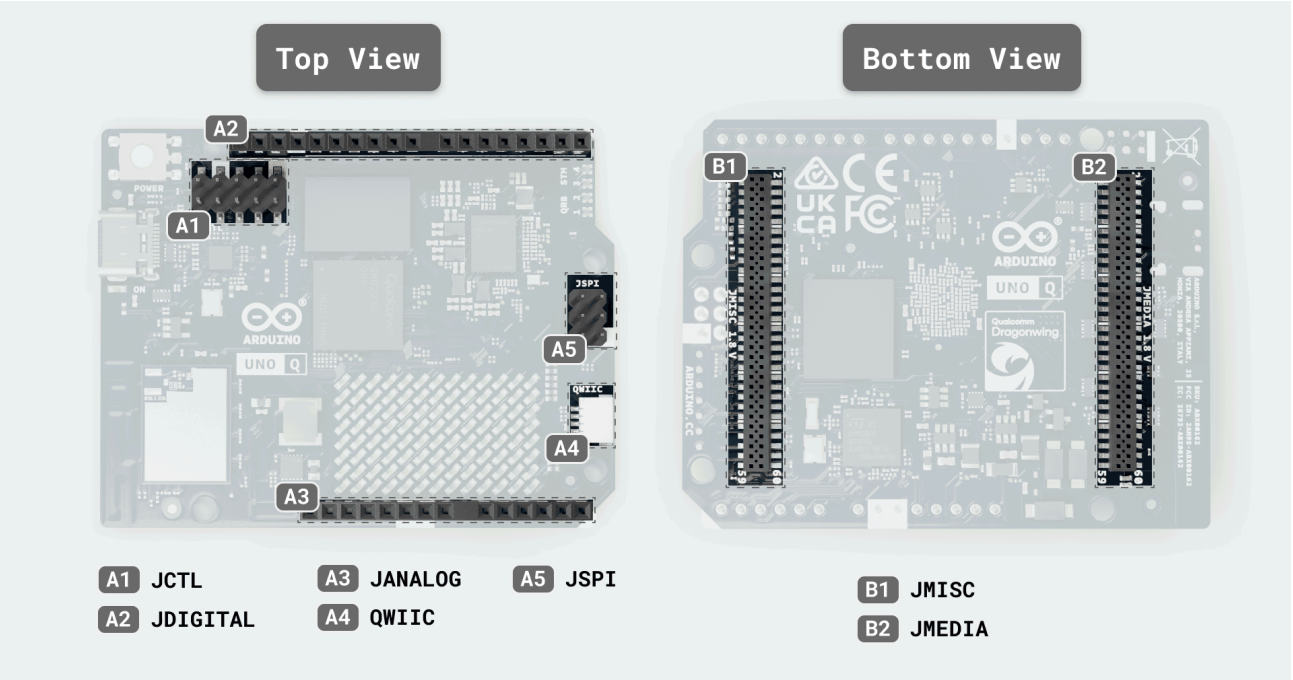

UNO Q Peripherals

- **JDIGITAL (A2) (JDIGITAL1) / JANALOG (A3) (JANALOG1):** 3.3 V GPIO with support for SPI, UART, CAN, PWM, and ADC inputs. Analog inputs are referenced to VREF+ on the 3.3 V rail. Valid input range is 0 V to VREF+. Some STM32U585 pads are 5 V-tolerant in digital mode, however when configured as ADC or any analog function (such as *A0* through *A5*), they are not 5 V-tolerant and must not exceed `VDD + 0.3 V`. Use external conditioning like a voltage divider or buffer for higher voltages. For *A4/A5* when used as I2C3 (PC1/PC0), use pull-ups to 3.3 V only. Additionally, **~D3 (PB0)** uses a TT-type I/O structure and is 3.6 V-tolerant, it is not 5 V-tolerant in any mode, including digital.
- **QWIIC Connector (A4) (QWIIC1):** Additional I²C bus (3.3 V logic). It maps as **PD13 (I2C4_SDA)** and **PD12 (I2C4_SCL)**. It guarantees plug-and-play compatibility with Modulino® nodes and 3rd party sensors and actuators.
- **JSPI (A5) (JSPI1):** 3.3 V SPI header for peripherals that provides MOSI, MISO, and SCLK signals, with chip-select available through a GPIO pin on JDIGITAL/JMISC. The pins use STM32U585 FT-type configuration with MISO on PC2, MOSI on PC3, and SCK on PD1. They are 5 V-tolerant as inputs or in open-drain, while outputs drive 3.3 V. Add level shifting if a 5 V input threshold or 5 V bidirectional signaling is required. Includes a 5V_SYS power pin.
- **JMEDIA (B2) (JMEDIA1):** Four-lane camera and display signals in the 1.8 V domain (MIPI-CSI-2 and MIPI-DSI).
- **JMISC (B1) (JMISC):** Mixed function header combining 3.3 V MCU signals and 1.8 V MPU signals. It provides MCU PSSI (parallel camera) bus, SDMMC1 test pins, TRACE, I2C4, MCO/CRS_SYNC, and OPAMP1 analog pins. Also it breakout out audio (Mic2, Headphone L/R+REF, LineOut P/M, Earpiece P/R, HS_DET) and power rails (+3V3, +5V_SYS, +1V8, VBAT and VCOIN for system use). Observe voltage domains: **MCU pins are 3.3 V, MPU GPIO are 1.8 V**.

- **JCTL (A1) (JCTL1):** Boot-mode pins, reset, and low-power wake signals (1.8 V logic).

SE4 UART is the system console (`shell UART`). It is separate from application UARTs and should not be repurposed for user I/O. It operates in the MPU's **1.8 V** I/O domain.

Do not use the Qualcomm Dragonwing™ QRB2210 lines reserved for **I²C**, **JMEDIA CCI** (Camera Control Interface), or **MI2S0** (I²S audio bus) as general-purpose I/O. These signals are interface-dedicated, operate at **1.8 V**, and are reserved in the Linux device tree. The headers expose them only for those functions.

9.1 JMISC (B1) (JMISC1) - Pin Map

Pin	Designation	MCU/SoC Pin	Domain	Notes
1	MCU_PSSI_D0	PC6	3.3V MCU	PSSI D0
2	MCU_SDMMC1_CMD	PD2	3.3V MCU	SDMMC1 CMD / test
3	MCU_PSSI_D1	PC7	3.3V MCU	PSSI D1
4	MCU_TRACE_CLK	PE2	3.3V MCU	Trace clock
5	MCU_PSSI_D2	PC8	3.3V MCU	PSSI D2
6	MCU_TRACE_D0	PE3	3.3V MCU	Trace data 0
7	MCU_PSSI_D3	PC9	3.3V MCU	PSSI D3
8	MCU_TRACE_D2	PE5	3.3V MCU	Trace data 2
9	MCU_PSSI_D4	PE4	3.3V MCU	PSSI D4
10	MCU_TRACE_D3	PE6	3.3V MCU	Trace data 3
11	MCU_PSSI_D5	PI4	3.3V MCU	PSSI D5
12	MCU_PE7	PE7	3.3V MCU	GPIO
13	MCU_PSSI_D6	PI6	3.3V MCU	PSSI D6
14	MCU_PE8	PE8	3.3V MCU	GPIO
15	MCU_PSSI_D7	PI7	3.3V MCU	PSSI D7
16	MCU_I2C4_SCL	PF14	3.3V MCU	I²C4 SCL
17	MCU_PSSI_PDCK	PD9	3.3V MCU	PSSI clock

Pin	Designation	MCU/SoC Pin	Domain	Notes
18	MCU_I2C4_SDA	PF15	3.3V MCU	I²C4 SDA
19	MCU_PSSI_RDY	PI5	3.3V MCU	PSSI ready
20	MCU_OPAMP1_VOUT	PA3	Analog	OpAmp1 VOUT
21	MCU_PSSI_DE	PD8	3.3V MCU	PSSI data enable
22	MCU_OPAMP1_VINP	PA0	Analog	OpAmp1 VINP
23	MCU_MCO	PA8	3.3V MCU	MCU clock out
24	MCU_OPAMP1_VINM	PA1	Analog	OpAmp1 VINM
25	MCU_CRS_SYNC	PA10	3.3V MCU	CRS sync
26	GND	-	Power	Ground
27	GND	-	Power	Ground
28	EAR_P_R	-	Analog	Audio ear P_R
29	MIC2_INP	-	Analog	Mic2 IN+
30	EAR_M_R	-	Analog	Audio ear M_R
31	MIC2_INM	-	Analog	Mic2 IN−
32	LINEOUT_P	-	Analog	Line out P
33	MIC2_BIAS	-	Analog	Mic2 bias
34	LINEOUT_M	-	Analog	Line out M
35	GND	-	Power	Ground
36	HPH_L	-	Analog	Headphone L
37	SOC_GPIO_0_SE0	-	1.8V MPU	SoC GPIO 0 (SE0)
38	HPH_R	-	Analog	Headphone R
39	SOC_GPIO_1_SE0	-	1.8V MPU	SoC GPIO 1 (SE0)
40	HPH_REF	-	Analog	Headphone REF
41	SOC_GPIO_2_SE0	-	1.8V MPU	SoC GPIO 2 (SE0)
42	HS_DET	-	Analog	Headset detect
43	SOC_GPIO_3_SE0	-	1.8V MPU	SoC GPIO 3 (SE0)
44	GND	-	Power	Ground
45	SOC_GPIO_86_SE0	-	1.8V MPU	SoC GPIO 86 (SE0)
46	SOC_GPIO_98	-	1.8V MPU	SoC GPIO 98
47	SOC_GPIO_82_SE0	-	1.8V MPU	SoC GPIO 82 (SE0)
48	SOC_GPIO_99	-	1.8V MPU	SoC GPIO 99

Pin	Designation	MCU/SoC Pin	Domain	Notes
49	SOC_GPIO_18	-	1.8V MPU	SoC GPIO 18
50	SOC_GPIO_100	-	1.8V MPU	SoC GPIO 100
51	SOC_GPIO_28	-	1.8V MPU	SoC GPIO 28
52	SOC_GPIO_101	-	1.8V MPU	SoC GPIO 101
53	+3V3 (OUT)	-	Power	3.3 V power out
54	+5V_SYS (OUT)	-	Power	Power input or output; source and board power OR'd via Schottky diodes
55	+3V3 (OUT)	-	Power	3.3 V power out
56	+5V_SYS (OUT)	-	Power	Power input or output; source and board power OR'd via Schottky diodes
57	+1V8 (IN)	-	Power	1.8 V rail in
58	GND	-	Power	Ground
59	VCOIN (IN)	-	Power	System voltage (PMIC RTC)
60	VBAT (OUT)	-	Power	System voltage (Reserved for system design and future features)

Note: SoC GPIO lines on JMISC are interface-dedicated (not maker GPIO). MCU are at 3.3 V logic, MPU are at 1.8 V logic, and audio/mic are analog.

9.2 JMEDIA (B2) (JMEDIA1) - Pin Map

Pin	Designation	Domain	Notes
1	GND	Power	Ground
2	GND	Power	Ground
3	MIPI_DSI0_CLK_M	MIPI D-PHY	DSI clock −
4	MIPI_DSI0_L1_P	MIPI D-PHY	DSI lane1 +
5	MIPI_DSI0_CLK_P	MIPI D-PHY	DSI clock +
6	MIPI_DSI0_L1_M	MIPI D-PHY	DSI lane1 −
7	GND	Power	Ground
8	GND	Power	Ground
9	MIPI_DSI0_L2_M	MIPI D-PHY	DSI lane2 −
10	MIPI_DSI0_L0_P	MIPI D-PHY	DSI lane0 +
11	MIPI_DSI0_L2_P	MIPI D-PHY	DSI lane2 +
12	MIPI_DSI0_L0_M	MIPI D-PHY	DSI lane0 −
13	GND	Power	Ground
14	GND	Power	Ground
15	MIPI_DSI0_L3_M	MIPI D-PHY	DSI lane3 −
16	SOC_CAM_MCLK0 (GPIO_20)	1.8V MPU	Camera master clock 0
17	MIPI_DSI0_L3_P	MIPI D-PHY	DSI lane3 +
18	SOC_CAM_MCLK1 (GPIO_21)	1.8V MPU	Camera master clock 1
19	GND	Power	Ground
20	GND	Power	Ground
21	CSI0_C0_LN0_M	MIPI D-PHY	CSI0 data0 −
22	CCI_I2C_SDA1 (GPIO_29)	1.8V MPU	Camera control I²C SDA1
23	CSI0_B0_LN0_P	MIPI D-PHY	CSI0 data0 +
24	CCI_I2C_SCL1 (GPIO_30)	1.8V MPU	Camera control I²C SCL1
25	GND	Power	Ground
26	GND	Power	Ground
27	CSI0_B1_LN1_M	MIPI D-PHY	CSI0 data1 −
28	CSI1_B2_LN3_P	MIPI D-PHY	CSI1 data3 +
29	CSI0_A1_LN1_P	MIPI D-PHY	CSI0 data1 +
30	CSI1_C2_LN3_M	MIPI D-PHY	CSI1 data3 −
31	GND	Power	Ground
32	GND	Power	Ground
33	CSI0_A0_CLK_M	MIPI D-PHY	CSI0 clock −
34	CSI1_C1_LN2_P	MIPI D-PHY	CSI1 data2 +
35	CSI0_NC_CLK_P	MIPI D-PHY	CSI0 clock +
36	CSI1_A2_LN2_M	MIPI D-PHY	CSI1 data2 −
37	GND	Power	Ground
38	GND	Power	Ground
39	CSI0_A2_LN2_M	MIPI D-PHY	CSI0 data2 −
40	CSI1_NC_CLK_P	MIPI D-PHY	CSI1 clock +

Pin	Designation	Domain	Notes
41	CSI0_C1_LN2_P	MIPI D-PHY	CSI0 data2 +
42	CSI1_A0_CLK_M	MIPI D-PHY	CSI1 clock −
43	GND	Power	Ground
44	GND	Power	Ground
45	CSI0_C2_LN3_M	MIPI D-PHY	CSI0 data3 −
46	CSI1_A1_LN1_P	MIPI D-PHY	CSI1 data1 +
47	CSI0_B2_LN3_P	MIPI D-PHY	CSI0 data3 +
48	CSI1_B1_LN1_M	MIPI D-PHY	CSI1 data1 −
49	GND	Power	Ground
50	GND	Power	Ground
51	CCI_I2C_SCL0 (GPIO_23)	1.8V MPU	Camera control I²C SCL0
52	CSI1_B0_LN0_P	MIPI D-PHY	CSI1 data0 +
53	CCI_I2C_SDA0 (GPIO_22)	1.8V MPU	Camera control I²C SDA0
54	CSI1_C0_LN0_M	MIPI D-PHY	CSI1 data0 −
55	GND	Power	Ground
56	GND	Power	Ground
57	VIN (IN)	Power	7-24 V input
58	+3V3 (OUT)	Power	3.3 V power out
59	VIN (IN)	Power	7-24 V input
60	+3V3 (OUT)	Power	3.3 V power out

Note: MIPI CSI/DSI lanes are D-PHY differential pairs and not general-purpose I/O. Control lines (CCI_I2C_*, SOC_CAM_MCLK*) are 1.8 V MPU domain. VIN on JMEDIA is the raw 7-24 V input (power only).

9.3 Qwiic (A4) (QWIIC1) - Pin Map

Pin	Designation	Net / Function	Domain	Notes
1	GND	Ground	Power	-
2	+3V3 OUT	PWR_3P3V	Power	Supply for Qwiic devices
3	SDA	PD13 (I2C4_SDA)	3.3 V	-
4	SCL	PD12 (I2C4_SCL)	3.3 V	-

9.4 JSPI (A5) (JSPI1) - Pin Map

Pin	Designation	Net / Function	Domain	Notes
1	MISO	PC2 (SPI2_MISO)	3.3 V	-
2	+5V	5V_SYS	Power	Power input or output; source and board power OR'd via Schottky diodes
3	SCK	PD1 (SPI2_SCK)	3.3 V	-
4	MOSI	PC3 (SPI2_MOSI)	3.3 V	-
5	RESET	MCU_NRST	3.3 V	-
6	GND	Ground	Power	-

9.5 JCTL (A1) (JCTL1) - Pin Map

Pin	Designation	Net / Function	Domain	Notes
1	GND	Ground	Power	-
2	USB_BOOT	Boot strap	1.8 V	-
3	VOL_DOWN	GPIO_36	1.8 V	GPIO
4	SOC_SE4_TX	Console UART TX (SE4)	1.8 V	System console
5	VOL_UP	GPIO_96	1.8 V	GPIO
6	SOC_SE4_RX	Console UART RX (SE4)	1.8 V	System console
7	GND	Ground	Power	-
8	PMIC_RESET	PM4125 reset	1.8 V	-
9	+1V8 OUT	VREG_L15A_1P8V	Power	1.8 V reference
10	VBUS_DISABLE	VBUS power switch disable	1.8 V	Controls VBUS path

9.6 JDIGITAL (A2) (JDIGITAL1) - Pin Map

Pin	Designation	MCU pin	Functions	Domain	Notes
1	D0	PB7	- USART1_RX - TIM4_CH2	3.3 V	UART
2	D1	PB6	- USART1_TX - TIM4_CH1	3.3 V	UART
3	D2	PB3	- TIM2_CH2	3.3 V	-
4	~D3	PB0	- OPAMP2_OUTPUT - TIM3_CH3	3.3 V	PWM / not 5 V-tolerant
5	D4	PA12	- FDCAN1_TX - TIM1_ETR	3.3 V	-
6	~D5	PA11	- FDCAN1_RX - TIM1_CH4	3.3 V	PWM
7	~D6	PB1	- TIM3_CH4	3.3 V	PWM
8	D7	PB2	- TIM8_CH4N	3.3 V	-
9	D8	PB4	- TIM3_CH1	3.3 V	-
10	~D9	PB8	- TIM4_CH3	3.3 V	PWM
11	~D10	PB9	- SPI2_SS (Chip Select) - TIM4_CH4	3.3 V	PWM
12	~D11	PB15	- SPI2_MOSI - TIM1_CH3N	3.3 V	PWM
13	D12	PB14	- SPI2_MISO - TIM1_CH2N	3.3 V	-
14	D13	PB13	- SPI2_SCK - TIM1_CH1N	3.3 V	-
15	GND	-	- Ground	Power	-
16	AREF	-	- Analog reference	-	Analog ref pin (not a GPIO)
17	D20	PB11	- I2C2_SDA - TIM2_CH4	3.3 V	-
18	D21	PB10	- I2C2_SCL - TIM2_CH3	3.3 V	-

All JDIGITAL lines are 3.3 V logic. Most pins use an FT-type I/O structure and are 5 V-tolerant as inputs. D3

(PB0) uses a TT-type I/O structure and is only 3.6 V-tolerant, do not apply 5 V to this pin in any mode.

9.7 JANALOG (A3) (JANALOG1) - Pin Map

Pin	Designation	Net / MCU pin	Functions	Domain	Notes
1	BOOT	MCU_BOOT0	- Boot strap	3.3 V	-
2	IOREF	PWR_3P3V	- I/O voltage reference (mirrors 3.3 V rail)	Power	Output only; do not back-feed
3	RESET	MCU_NRST	- MCU reset	3.3 V	-
4	+3V3 OUT	PWR_3P3V	- 3.3 V supply	Power	-
5	+5V OUT	5V_SYS	- 5 V supply (diode-OR output)	Power	Power input or output; source and board power OR'd via Schottky diodes
6	GND	GND	- Ground	Power	-
7	GND	GND	- Ground	Power	-
8	VIN IN	DC_IN	- 7-24 V input	Power	Power only
9	A0 / D14	PA4	- ADC input - DAC0 - TIM2_CH1	Analog / 3.3 V	Direct ADC / not 5 V-tolerant
10	A1 / D15	PA5	- ADC input - DAC1 - TIM3_CH1	Analog / 3.3 V	Direct ADC / not 5 V-tolerant
11	A2 / D16	PA6	- ADC input - OPAMP2_INPUT+ - TIM3_CH2	Analog / 3.3 V	
12	A3 / D17	PA7	- ADC input - OPAMP2_INPUT−	Analog / 3.3 V	-
13	A4 / D18	PC1	- ADC input - I2C3_SDA - LPTIM1_CH1	Analog / 3.3 V	-
14	A5 / D19	PC0	- ADC input - I2C3_SCL - LPTIM1_IN1	Analog / 3.3 V	-

A0 (PA4) and A1 (PA5) are direct STM32U585 ADC inputs referenced to `VREF+`. They are not 5 V-tolerant. Valid input range is `0-VREF+` (≈3.3 V). The absolute maximum at the pin is `VDD + 0.3 V`, approximately 3.6 V. Above this level, the MCU's internal protection diodes begin to conduct. The header also provides `5V_SYS` (protected by the Schottky diode-OR) and `PWR_3P3V` (output only) power pins, different from the ADC-capable A0/A1 pins. Do not apply 5 V to **A0** or **A1**. IOREF is connected to the 3.3 V rail (`PWR_3P3V`) and is provided as a reference/output for shields. It is not to be used to feed power back into the board.

10 High-Speed Peripherals

- **USB-C:** USB 3.1 with Role-Switching Capabilities. DisplayPort Alt-Mode via ANX7625 DSI-to-DP bridge. The connector's SuperSpeed differential pairs are shared between DP Alt-Mode and USB 3.1 data. When DisplayPort Alt-Mode is active, USB data speed is reduced.
- **Camera:** Four-lane **MIPI-CSI-2** (1.8 V I/O).
- **Display:** Four-lane **MIPI-DSI** into **ANX7625** for DisplayPort Alt-Mode on USB-C. The same MIPI-DSI signal is also exposed on the JMEDIA header, the two outputs are multiplexed and not simultaneous. When operating in Single-Board Computer (SBC) mode, the board supports Full HD (1920 × 1080p) displays with optimal resolution at 1280 × 720p.
- **Wireless:** Dual-band Wi-Fi® (802.11a/b/g/n/ac) and Bluetooth® 5.1 on a shared module.

11 Device Operation

11.1 Getting Started - Arduino App Lab

Arduino App Lab [1] is a unified editor that builds and runs projects on both processors of the board. A project is an **App** that can include:

- A Python® program that runs on the Linux system (Qualcomm Dragonwing™ QRB2210)
- An Arduino sketch that runs on the microcontroller (MCU) (STM32U585)
- Optional **Brick** (pre-packaged services such as AI models, web servers, or API clients) that are deployed alongside the App (runs on the Linux system as well).

Apps use **Bridge** to exchange data between the Linux side and the microcontroller.

Arduino App Lab can be installed on your PC, or executed directly on the UNO Q in Single-Board Computer mode. For this setup, the UNO Q's 4GB LPDDR4X variant is recommended to ensure sufficient memory for stable operation and resource-intensive applications. To use the board:

- Launch a ready-to-use example in Arduino App Lab, customize it to your needs, or build a new application from scratch using the integrated editor.
- Press the **Run** button in Arduino App Lab [1].
- The editor builds the Linux component, flashes the MCU sketch, deploys any selected Brick, and starts everything on the board.
- Logs for both sides are available in the editor and you can iterate without leaving Arduino App Lab.

For first time setting up:

1. Install Arduino App Lab [1], launch it, and connect UNO Q, use a **USB-C data** cable for PC-hosted mode, or simply power the board for SBC mode.
2. The board will automatically check for updates. If there are any updates available, you will be prompted to install them. Once the update is finished, the Arduino App Lab[1] will need to be restarted.
3. During the first setup, you will be asked to provide a name and password for the device. You will also be asked to provide Wi-Fi® credentials for your local network.
4. To test the board, navigate to an example App in the **"Examples"** section of the Arduino App Lab[1], and click on the "Run" button in the top right corner. You can also create a new App in the **"Apps"** section.
5. The status of the App can be monitored in the console tab of the App.

> **Note:** In **PC-hosted** mode, a *USB data* connection is required for first-time setup. Afterwards you can use the **Network** target over LAN (SSH). In **Single-Board Computer (SBC)** mode, no USB data link is needed for setup, just power the board and use the **Network** target once it joins your network. For peripherals in SBC mode (keyboard, mouse, USB camera, microphone), use a USB-C dongle with external power delivery capabilities. When DisplayPort Alt-Mode is active, USB data speed is reduced.

Use a 5 V / 3 A USB-C source and cable, or power from the 5 V or VIN pins as specified in the input power section (USB-C is 5 V only / VIN is 7-24 V).

> First boot typically takes 20-30 seconds while Linux starts. Wait for the boot LED sequence or the LED-matrix animation to finish before interacting with the board.

11.2 Bricks

Bricks are modular building blocks in Arduino App Lab that let you extend your application without writing all of the underlying infrastructure. Each Brick encapsulates ready-made functionality, such as sensor integration, AI models, databases, or user interfaces, that you can drop into a project. Typical Bricks provide:

- An AI model (e.g., object classification or keyword spotting)
- A web UI or REST API service
- An integration to an external data source

Bricks are deployed alongside the App and managed by the Linux side. The typical workflow is:

1. Create an **App** in Arduino App Lab.
2. Select any **Brick** the App should use.
3. Add your Python® code (Linux) and/or your Arduino sketch (MCU).
4. The Brick needs to be imported into your `main.py` file, and initialized following the Brick's API.
5. Press **Run** to deploy the Linux application, flash the MCU, and launch your App together with its Bricks.
6. The **Bridge** tool handles data exchange between Linux and MCU.

> While an App is bound and running, USB interfaces may be occupied by the system. Use Arduino App Lab [1] to deploy and monitor. To use external CLI tools over USB, stop the App or disconnect the board.

11.3 Hello World

Let's program UNO Q with the classic Arduino "Hello World" - the *Blink LED* example. This helps verify that the board is correctly connected to Arduino App Lab.

1. Open Arduino App Lab. It starts in the **Examples** section.
2. If you are not using single-board computer mode, **connect UNO Q** to your PC.
3. Open *Blink LED*. Review the example notes to see how the App works.
4. Click **Run** and wait for the upload to complete.

You should now see the red channel of the built-in RGB LED turn on for one second, then off for one second, repeatedly. The LED is driven by the STM32U585 microcontroller through the Arduino sketch.

You can start from a blank App or use an existing example. For first-time use, the Hello World example is recommended to learn the basic structure.

> Every time you run an App, the microcontroller sketch is compiled and the Python® application starts on the Linux system. Depending on complexity, this may take up to a minute.

11.4 How to Check the App Is Running

Open the **Console** in App Lab. There are three tabs:

- **Start-up**: logs from the launch sequence, including MCU compilation and Linux deployment
- **Main (Python®)**: output from the Python® application (`print()`)
- **Sketch (Microcontroller)**: serial output from the Arduino sketch (`Serial.println()`)

An App can launch successfully yet still have runtime issues. Check the Python® log for errors. If a sketch compilation error occurs, launch is aborted.

11.5 Power Button

UNO Q includes a **power button (JBTN1)** you can use to reboot the board.

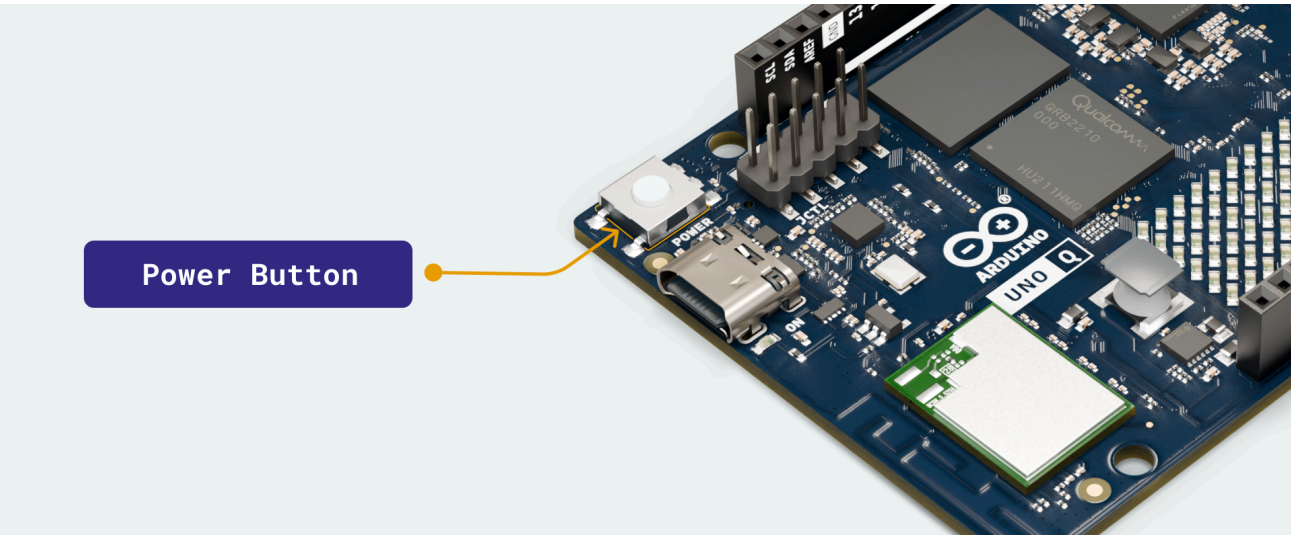

UNO Q Power Button

Long press (≥ 5 s): reboots the Linux system (MPU). This does not cut power to the board.

> **Note:** A long-press reboot restarts the Linux environment and may interrupt running Apps. Save work and ensure safe shutdown of external processes where applicable. The board boots up automatically when power is supplied. Pressing the button is not required for normal boot.

11.6 Online Resources

Explore community projects on Project Hub [3], browse the Library Reference [4] for supported APIs, and find accessories such as Qwiic sensors, UNO Shield and carrier boards in the Arduino Store [5].

12 Mechanical Information

The board dimension measures 68.58 mm × 53.34 mm, with bottom-side parts kept below 2 mm so the board can stack onto carrier bases. The outline and hole pattern follows and are compatible with the UNO form factor.

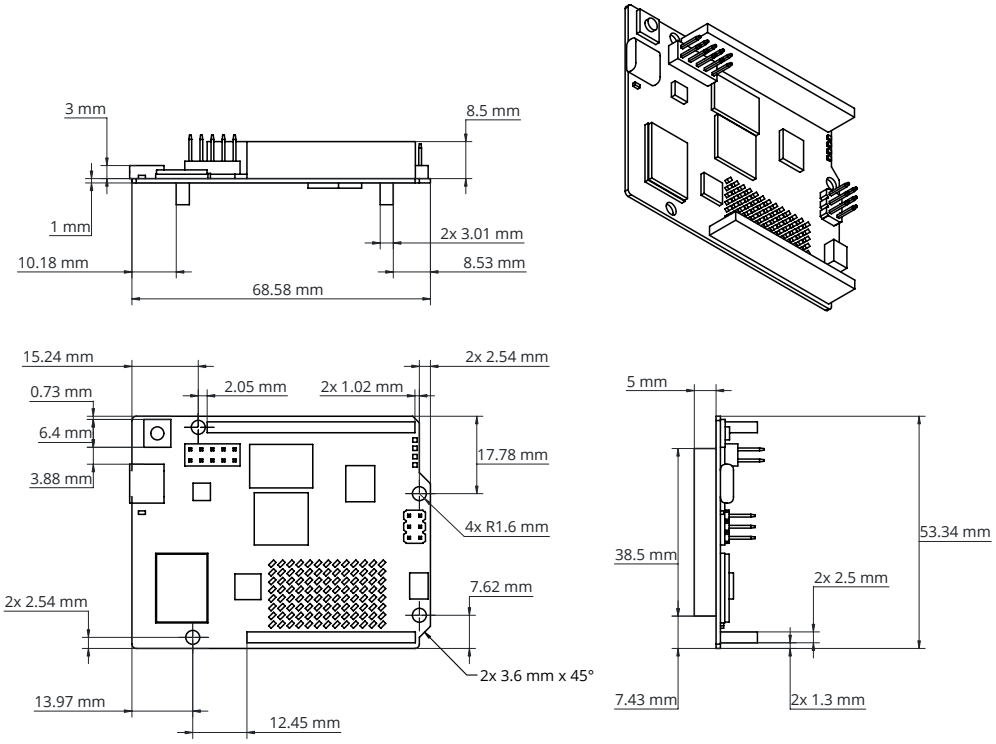

Safety Information

Maintain a minimum separation distance of 20 cm between the device and the user during operation. The 5 GHz frequency band may be subject to operational restrictions depending on the country of use.

Bulgarian (BG):

Поддържайте минимално разстояние от 20 см между устройството и потребителя по време на работа. Честотната лента 5 GHz може да бъде обект на ограничения за използване в зависимост от държавата.

Croatian (HR):

Održavajte minimalnu udaljenost od 20 cm između uređaja i korisnika tijekom rada. Frekvencijski pojas od 5 GHz može podlijegati ograničenjima ovisno o zemlji uporabe.

Czech (CS):

Udržujte minimální vzdálenost 20 cm mezi zařízením a uživatelem během provozu. Pásmo 5 GHz může podléhat provozním omezením v závislosti na zemi použití.

Danish (DA):

Oprethold en minimumsafstand på 20 cm mellem enheden og brugeren under drift. 5 GHz-båndet kan være underlagt driftsmæssige begrænsninger afhængigt af brugslandet.

Dutch (NL):

Houd tijdens gebruik een minimale afstand van 20 cm tussen het apparaat en de gebruiker aan. De 5GHz-band kan onderhevig zijn aan gebruiksbeperkingen afhankelijk van het land van gebruik.

Estonian (ET):

Hoidke seadme ja kasutaja vahel töötamise ajal vähemalt 20 cm kaugust. 5 GHz sagedusribale võivad kehtida kasutuspiirangud sõltuvalt kasutusriigist.

Finnish (FI):

Pidä laitteen ja käyttäjän välillä vähintään 20 cm etäisyys käytön aikana. 5 GHz taajuuskaistaan voi kohdistua käyttörajoituksia käyttömaasta riippuen.

French (FR):

Maintenez une distance minimale de 20 cm entre l'appareil et l'utilisateur pendant son fonctionnement. La bande de fréquences 5 GHz peut être soumise à des restrictions d'utilisation selon le pays.

German (DE):

Halten Sie während des Betriebs einen Mindestabstand von 20 cm zwischen dem Gerät und dem Benutzer ein. Das 5-GHz-Frequenzband kann je nach Einsatzland Nutzungsbeschränkungen unterliegen.

Greek (EL):

Διατηρείτε ελάχιστη απόσταση 20 cm μεταξύ της συσκευής και του χρήστη κατά τη λειτουργία. Η ζώνη συχνοτήτων 5 GHz ενδέχεται να υπόκειται σε περιορισμούς ανάλογα με τη χώρα χρήσης.

Hungarian (HU):

A működés során tartson legalább 20 cm távolságot az eszköz és a felhasználó között. Az 5 GHz-es frekvenciasáv használata országtól függően korlátozott lehet.

Irish (GA):

Coinnigh ar a laghad fad 20 cm idir an gléas agus an t-úsáideoir le linn úsáide. D'fhéadfadh srianta oibriúcháin a bheith ar an mbanda minicíochta 5 GHz ag brath ar an tír.

Italian (IT):

Mantenere una distanza minima di 20 cm tra il dispositivo e l'utente durante il funzionamento. La banda di frequenza a 5 GHz può essere soggetta a restrizioni operative a seconda del paese.

Latvian (LV):

Uzturiet vismaz 20 cm attālumu starp ierīci un lietotāju darbības laikā. 5 GHz frekvenču joslai var būt izmantošanas ierobežojumi atkarībā no valsts.

Lithuanian (LT):

Naudojimo metu laikykite bent 20 cm atstumą tarp įrenginio ir naudotojo. 5 GHz dažnių juostai gali būti taikomi naudojimo apribojimai priklausomai nuo šalies.

Maltese (MT):

Żomm distanza minima ta' 20 cm bejn l-apparat u l-utent waqt l-użu. Il-medda tal-frekwenza 5 GHz tista' tkun soġġetta għal restrizzjonijiet skont il-pajjiż.

Polish (PL):

Podczas pracy zachowaj minimalną odległość 20 cm między urządzeniem a użytkownikiem. Pasmo częstotliwości 5 GHz może podlegać ograniczeniom w zależności od kraju użytkowania.

Portuguese (PT):

Mantenha uma distância mínima de 20 cm entre o dispositivo e o utilizador durante o funcionamento. A banda de frequência de 5 GHz pode estar sujeita a restrições de utilização dependendo do país.

Romanian (RO):

Mențineți o distanță minimă de 20 cm între dispozitiv și utilizator în timpul funcționării. Banda de frecvență de 5 GHz poate face obiectul unor restricții în funcție de țara de utilizare.

Slovak (SK):

Počas prevádzky dodržiavajte minimálnu vzdialenosť 20 cm medzi zariadením a používateľom. Pásmo 5 GHz môže podliehať prevádzkovým obmedzeniam v závislosti od krajiny použitia.

Slovenian (SL):

Med delovanjem ohranjajte najmanj 20 cm razdalje med napravo in uporabnikom. Pas frekvenc 5 GHz je lahko omejen glede na državo uporabe.

Spanish (ES):

Mantenga una distancia mínima de 20 cm entre el dispositivo y el usuario durante su funcionamiento. La banda de frecuencia de 5 GHz puede estar sujeta a restricciones según el país de uso.

Swedish (SV):

Håll ett minsta avstånd på 20 cm mellan enheten och användaren under drift. 5 GHz-bandet kan vara föremål för driftbegränsningar beroende på användningsland.

Certifications

13 RED / UK

CE	Europe – EU Declaration of Conformity
Česky [Czech]	Arduino S.r.l tímto prohlašuje, že tento Radiolan je ve shodě se základními požadavky a dalšími příslušnými ustanoveními směrnice 2014/53/EU.
Dansk [Danish]	Undertegnede Arduino S.r.l erklærer herved, at følgende udstyr Radiolan overholder de væsentlige krav og øvrige relevante krav i direktiv 2014/53/EU.
Deutsch [German]	Hiermit erklärt Arduino S.r.l dass sich das Gerät Radiolan in Übereinstimmung mit den grundlegenden Anforderungen und den übrigen einschlägigen Bestimmungen der Richtlinie 2014/53/EU befindet.
Eesti [Estonian]	Käesolevaga kinnitab Arduino S.r.l seadme Radiolan vastavust direktiivi 2014/53/EU põhinõuetele ja nimetatud direktiivist tulenevatele teistele asjakohastele sätetele.
English	Hereby, Arduino S.r.l, declares that this Radiolan is in compliance with the essential requirements and other relevant provisions of Directive 2014/53/EU.
Español [Spanish]	Por medio de la presente Arduino S.r.l declara que el Radiolan cumple con los requisitos esenciales y cualesquiera otras disposiciones aplicables o exigibles de la Directiva 2014/53/EU.
Ελληνική [Greek]	ΜΕ ΤΗΝ ΠΑΡΟΥΣΑ Arduino S.r.l ΔΗΛΩΝΕΙ ΟΤΙ Radiolan ΣΥΜΜΟΡΦΩΝΕΤΑΙ ΠΡΟΣ ΤΙΣ ΟΥΣΙΩΔΕΙΣ ΑΠΑΙΤΗΣΕΙΣ ΚΑΙ ΤΙΣ ΛΟΙΠΕΣ ΣΧΕΤΙΚΕΣ ΔΙΑΤΑΞΕΙΣ ΤΗΣ ΟΔΗΓΙΑΣ 2014/53/EU.
Français [French]	Par la présente Arduino S.r.l déclare que l'appareil Radiolan est conforme aux exigences essentielles et aux autres dispositions pertinentes de la directive 2014/53/EU.
Íslenska [Icelandic]	Hér með lýsir Arduino S.r.l yfir því að Radiolan er í samræmi við grunnkröfur og aðrar kröfur, sem gerðar eru í tilskipun 2014/53/EU.
Italiano [Italian]	Con la presente Arduino S.r.l dichiara che questo Radiolan è conforme ai requisiti essenziali ed alle altre disposizioni pertinenti stabilite dalla direttiva 2014/53/EU.
Latviski [Latvian]	Ar šo Arduino S.r.l deklarē, ka Radiolan atbilst Direktīvas 2014/53/EU būtiskajām prasībām un citiem ar to saistītajiem noteikumiem.
Lietuvių [Lithuanian]	Šiuo Arduino S.r.l deklaruoja, kad šis Radiolan atitinka esminius reikalavimus ir kitas 2014/53/EU Direktyvos nuostatas.
Malti [Maltese]	Hawnhekk, Arduino S.r.l, jiddikjara li dan Radiolan jikkonforma mal-ħtiġijiet essenzjali u ma provvedimenti oħrajn relevanti li hemm fid-Dirrettiva 2014/53/EU.
Magyar [Hungarian]	Alulírott, Arduino S.r.l nyilatkozom, hogy a Radiolan megfelel a vonatkozó alapvető követelményeknek és az 2014/53/EU irányelv egyéb előírásainak.
Nederlands [Dutch]	Hierbij verklaart Arduino S.r.l dat het toestel Radiolan in overeenstemming is met de essentiële eisen en de andere relevante bepalingen van richtlijn 2014/53/EU.
Norsk [Norwegian]	Arduino S.r.l erklærer herved at utstyret Radiolan er i samsvar med de grunnleggende krav og øvrige relevante krav i direktiv 2014/53/EU.

CE	Europe – EU Declaration of Conformity
Polski [Polish]	Niniejszym Arduino S.r.l oświadcza, że Radiolan jest zgodny z zasadniczymi wymogami oraz pozostałymi stosownymi postanowieniami Dyrektywy 2014/53/EU.
Português [Portuguese]	Arduino S.r.l declara que este Radiolan está conforme com os requisitos essenciais e outras disposições da Directiva 2014/53/EU.
Slovensko [Slovenian]	Arduino S.r.l izjavlja, da je ta Radiolan v skladu z bistvenimi zahtevami in ostalimi relevantnimi določili direktive 2014/53/EU.
Slovensky [Slovak]	Arduino S.r.l týmto vyhlasuje, že Radiolan spĺňa základné požiadavky a všetky príslušné ustanovenia Smernice 2014/53/EU.
Suomi [Finnish]	Arduino S.r.l vakuuttaa täten että Radiolan tyyppinen laite on direktiivin 2014/53/EU oleellisten vaatimusten ja sitä koskevien direktiivin muiden ehtojen mukainen.
Svenska [Swedish]	Härmed intygar Arduino S.r.l att denna Radiolan står I överensstämmelse med de väsentliga egenskapskrav och övriga relevanta bestämmelser som framgår av direktiv 2014/53/EU.
UK	**United Kingdom – UKCA Declaration of Conformity**
United Kingdom	Hereby, Arduino S.r.l, declares that this Radiolan is in compliance with the essential requirements and other relevant provisions of The Redio Equipment Regulations 2017.

The full text of the EU and UKCA declaration of conformity is available at the following internet address: https://docs.arduino.cc/certifications/

Requirements in:

Belgium (BE), Bulgaria (BG), Czech Republic (CZ), Denmark (DK), Germany (DE), Iceland (IS), Estonia (EE), Ireland (IE), Greece (EL), Spain (ES), France (FR), Croatia (HR), Italy (IT), Cyprus (CY), Latvia (LV), Liechtenstein (LI), Lithuania (LT), Luxembourg (LU), Hungary (HU), Malta (MT), Netherlands (NL), Norway (NO), Austria (AT), Poland (PL), Portugal (PT), Romania (RO), Slovenia (SI), Slovakia (SK), Turkey (TR), Finland (FI), Sweden (SE), Switzerland (CH), United Kingdom (North Irland) (UK(NI)), and United Kingdom (UK).

Operations in the 5.15-5.35GHz band are restricted to indoor usage only.

This equipment should be installed and operated with a minimum distance of 20 cm between the radiator and your body.

13.1 Radio Equipment Information (RED Compliance)

This radio equipment operates in the following frequency bands and with the maximum radio-frequency power indicated below:

Radio Technology	Frequency Band	Maximum Transmit Power
Bluetooth® Classic	2400 - 2483.5 MHz	15 dBm
Bluetooth® Low Energy (BLE)	2400 - 2483.5 MHz	9.5 dBm
Wi-Fi® 2.4 GHz	2400 - 2483.5 MHz	19.59 dBm EIRP
Wi-Fi® 5 GHz	5150 - 5350 MHz	17.64 dBm EIRP
Wi-Fi® 5 GHz	5470 - 5725 MHz	17.64 dBm EIRP
Wi-Fi® 5 GHz	5725 - 5850 MHz	17.64 dBm EIRP
Wi-Fi® 5 GHz (upper band)	5725 - 5875 MHz	13.95 dBm EIRP

In accordance with EU regulations (RED Directive 2014/53/EU), the use of the 5 GHz band may be subject to national restrictions.

14 FCC

FCC compliance information

This device complies with Part 15 of the FCC Rules. Operation is subject to the following two conditions: (1) this device may not cause harmful interference, and (2) this device must accept any interference received, including interference that may cause undesired operation.

This product does not contain any user serviceable components. Any unauthorized product changes or modifications will invalidate warranty and all applicable regulatory certifications and approvals, including authority to operate this device.

FCC Part 15 Digital Emissions Compliance

We Arduino S.r.l. - Via Andrea Appiani 25, 20900 Monza (Italy), declare under our sole responsibility that the product Arduino® UNO Q complies with Part 15 of the FCC Rules. Operation is subject to the following two conditions: (1) this device may not cause harmful interference, and (2) this device must accept any interference received, including interference that may cause undesired operation.

WARNING: This equipment has been tested and found to comply with the limits for a Class B digital device, pursuant to Part 15 of the FCC Rules. These limits are designed to provide reasonable protection against harmful interference in a residential installation. This equipment generates and radiates radio frequency energy and, if not installed and used in accordance with the instructions, may cause harmful interference to radio communications.

However, there is no guarantee that interference will not occur in a particular installation. If this equipment does cause harmful interference to radio or television reception, which can be determined by turning the equipment off and on, the user is encouraged to try to correct the interference by one or more of the following measures:

- Reorient or relocate the receiving antenna.
- Increase the separation between the equipment and receiver.
- Connect the equipment into an outlet on a circuit different from the one the receiver is connected to.
- Consult the dealer or an experienced radio/TV technician for help.

The user may find the following booklet prepared by the Federal Communications Commission helpful:

The Interference Handbook

This booklet is available from the U.S. Government Printing Office, Washington, D.C. 20402. Stock No.004-000-00345-4.

Radiation Exposure Statement

1. This transmitter must not be co-located or operating in conjunction with any other antenna or transmitter.
2. This equipment complies with RF radiation exposure limits set forth for an uncontrolled environment. This equipment should be installed and operated, keeping the radiator at least 20cm or more away from the person's body.

15 ISED

English:

This device complies with Canadian RSS-247. This device complies with Industry Canada license-exempt RSS standard(s). Operation is subject to the following two conditions: (1) this device may not cause interference, and (2) this device must accept any interference, including interference that may cause undesired operation of the device.

French :

Ce dispositif est conforme à la norme CNR-247 d'Industrie Canada applicable aux appareils radio exempts de licence. Son fonctionnement est sujet aux deux conditions suivantes: (1) le dispositif ne doit pas produire de brouillage préjudiciable, et (2) ce dispositif doit accepter tout brouillage reçu, y compris un brouillage susceptible de provoquer un fonctionnement indésirable.

English:

Caution:

(i) the device for operation in the band 5150-5250 MHz is only for indoor use to reduce the potential for harmful interference to co-channel mobile satellite systems;

French :

Avertissement :

Le guide d'utilisation des dispositifs pour réseaux locaux doit inclure des instructions précises sur les restrictions susmentionnées, notamment :

(i) les dispositifs fonctionnant dans la bande 5 150-5 250 MHz sont réservés uniquement pour une utilisation à l'intérieur afin de réduire les risques de brouillage préjudiciable aux systèmes de satellites mobiles utilisant les mêmes canaux ;

> **Note:** For 5GHz and/or when co-located with 5 GHz transmitters, the following statements should be provided in the user information.

Radiation Exposure Statement

1. To comply with the Canadian RF exposure compliance requirements, this device and its antenna must not be co-located or operating in conjunction with any other antenna or transmitter.
2. To comply with RSS 102 RF exposure compliance requirements, this equipment should be installed and operated, keeping the radiator at least 20cm or more away from the person's body.

Déclaration d'exposition aux rayonnements

1. Pour se conformer aux exigences de conformité RF canadienne l'exposition, cet appareil et son antenne ne doivent pas être co-localisés ou fonctionnant en conjonction avec une autre antenne ou transmetteur.
2. Pour se conformer aux exigences de conformité CNR 102 RF exposition, cet équipement doit être installé et utilisé en maintenant le radiateur à au moins 20cm ou plus du corps de la personne.

16 MIC

5GHz band (W52, W53) Indoor use only. (Except for communication with high power radios and in vehicles at W52).

日本語:

5GHz 帯(W52, W53)は屋内利用に限る (高出力システムと通信する場合を除く)

17 SRRC

本设备包含型号核准代码为: ABX00162 - CMIIT ID: 26J996Q0A162 (M) / ABX00173 - CMIIT ID: 26J996Q0A173 (M) 的无线电发射模块。

18 ICASA

English:

5GHz band (W52,W53): Indoor use only (except communicate to high power radio)

19 NCC

根據 NCC LP0002 低功率射頻器材技術規範_章節3.8.2： **警語:** 取得審驗證明之低功率射頻器材，非經核准，公司、商號或使用者均不得擅自變更頻 率、加大功率或變更原設計之特性及功能。 低功率射頻器材之使用不得影響飛航安全及干擾合法通信；經發現有干擾現象時，應 立即停用，並改善至無干擾時方得繼續使用。 前述合法通信，指依電信管理法規定作業之無線電通信。 低功率射頻器材須忍受合法通信或工業、科學及醫療用電波輻射性電機設備之干擾。 應避免影響附近雷達系統之操作。

20 ANATEL

Este equipamento não tem direito à proteção contra interferência prejudicial e não pode causar interferência em sistemas devidamente autorizados. Para maiores informações, consulte o site da ANATEL – http://www.anatel.gov.br

Company Information

Company name	Arduino S.r.l.
Address	Via Andrea Appiani 25, 20900 Monza (Italy)

Documentation Reference

No.	Reference	Link
1	Arduino App Lab	https://www.arduino.cc/en/software
2	Arduino UNO Q Documentation	https://docs.arduino.cc/hardware/uno-q/
3	Project Hub	https://projecthub.arduino.cc/
4	Library Reference	https://docs.arduino.cc/libraries/
5	Arduino Store	https://store.arduino.cc/

Document Revision History

Date	Revision	Changes
26/08/2026	15	Update 5 V power pin (5V_SYS) input option on JANALOG, JMISC, JSPI
26/06/2026	14	Add German language
17/06/2026	13	Display output clarification (USB-C and JMEDIA)
16/06/2026	12	Add Safety information section
01/06/2026	11	Add RED radio equipment frequency band and transmit power information
16/05/2026	10	Pin description section updates
15/04/2026	9	Add Anatel Certification
24/03/2026	8	General documentation update
17/02/2026	7	Update VBAT description in Power Supply section and JMISC pin 60 note
10/02/2026	6	Translations in Chinese, Portuguese, Certification updates
19/01/2026	5	Add video output resolution specifications
24/11/2025	4	Add hardware acceleration section (graphics APIs, video codecs, OpenCL support); remove incorrect default password reference
05/11/2025	3	Update operational information
27/10/2025	2	Mechanical drawing and RTC power detail update
01/10/2025	1	First release